CAMBRIDGE
INTERNATIONAL EXAMINATIONS

NOVEMBER 2002

GCE Advanced Subsidiary Level

MARK SCHEME

MAXIMUM MARK : 60

SYLLABUS/COMPONENT :9701 /2

CHEMISTRY
(STRUCTURED QUESTIONS (AS))

UNIVERSITY of CAMBRIDGE
Local Examinations Syndicate

Question Number	Mark Scheme Details	Part Mark
1 (a)	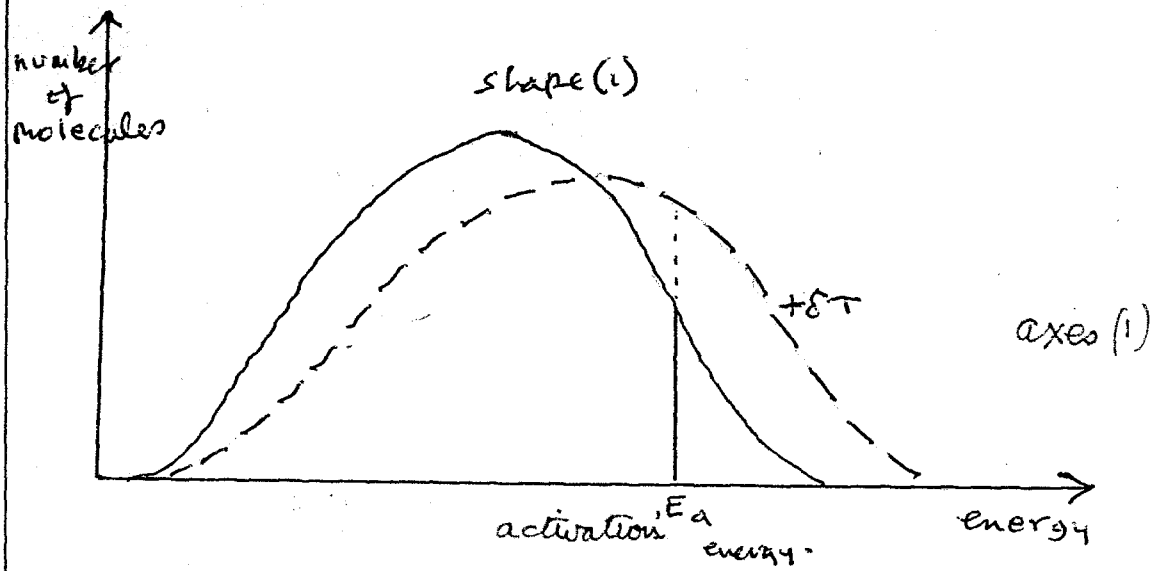	[2]
(b)	not all molecules have the same energy / some have little, some a lot, distributed about a mean. OR asymmetrical / not a normal distribution (1)	[1]
(c) (i)	Molecules require a certain / minimum energy before they can react // only molecules which have this energy can react successfully on collision. (1)	
(ii)	line on graph (1)	[2]
(d)(i)	The ~~dotted~~ dotted line on the graph – maximum lower and to the right of the solid line maximum (1)	
(ii)	larger area to right of E_a line is the number of molecules with energy greater than E_a. (1) Rate is proportional to number of molecules with E_a (or more) (1) Collision rate faster when molecules speed greater (1) (max 2)	[3]
	[Total: 8]	

Question Number	Mark Scheme Details	Part Mark
2 (a)(i)	An a acid is a proton (H^+) donor (1)	
(ii)	An acid which is partially ionised (1) $HA \rightleftharpoons H^+ + A^-$ must have $\rightleftharpoons$ (1)	[3]
(b) (i)	The forward reaction proceeds at the same rate as the reverse reaction (1)	
(ii)	$K_c = \frac{[ester][H_2O]}{[acid][alcohol]}$ (1)	
(c) (i)	acid + alcohol $\rightleftharpoons$ ester + water initially. $\frac{6}{60} = 0.1$ $\frac{6}{46} = 0.13$ $\frac{4.4}{88} = 0.050$ + 0 All three (1) at equilm [0.040] $0.13 - 0.06 = 0.07$ $0.050 + 0.06 = 0.11$ 0.06 all three (1)	
(ii)	$K_c = \frac{0.11 \times 0.06}{0.04 \times 0.07} = 2.36$ (1)	
(iii)	Units 'cancel' / two concn terms 'top × bottom' (1)	4
	Total: 10	

Question Number	Mark Scheme Details	Part Mark
3 (a)	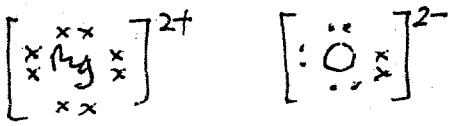 (1)	[1]
(b)	(i) Na_2O (ii) MgO or Al_2O_3 (iii) SO_3 (allow SO_2) (iv) SO_2 or SO_3 (v) SO_2 1 each	[5]
(c)	(i) $Al_2O_3 + 6HCl \rightarrow 2AlCl_3 + 3H_2O$ (ii) $NaOH + SO_2 \rightarrow NaHSO_3$ or $2NaOH + SO_2 \rightarrow Na_2SO_3 + H_2O$ 1 each	[2]
(d)	(i) $2Sb_2S_3 + \underline{9}\ O_2 \rightarrow Sb_4O_6 + \underline{6}\ SO_2$ (1) (ii) +3 or 3 NOT 3+ (1) (iii) 2 mols Sb_2S_3 give $3CO_2$ ∴ 10 mols Sb_2S_3 give 15 mol CO_2 (1) $15 \times 24.0\ dm^3 = 360\ dm^3$ (1)	[4]
	[Total : 12]	

Question Number	Mark Scheme Details	Part Mark
4 (a)	$CH_4 + H_2O \longrightarrow 3H_2 + CO$	1
(b)	(i) $N_2 + 3H_2 \rightleftharpoons 2NH_3$ ⇌ necessary (1)	1
	(ii) • pressure over 100 atm • temp 400 – 600°C range • iron / iron oxide (catalyst) } all (1)	1
	(iii) 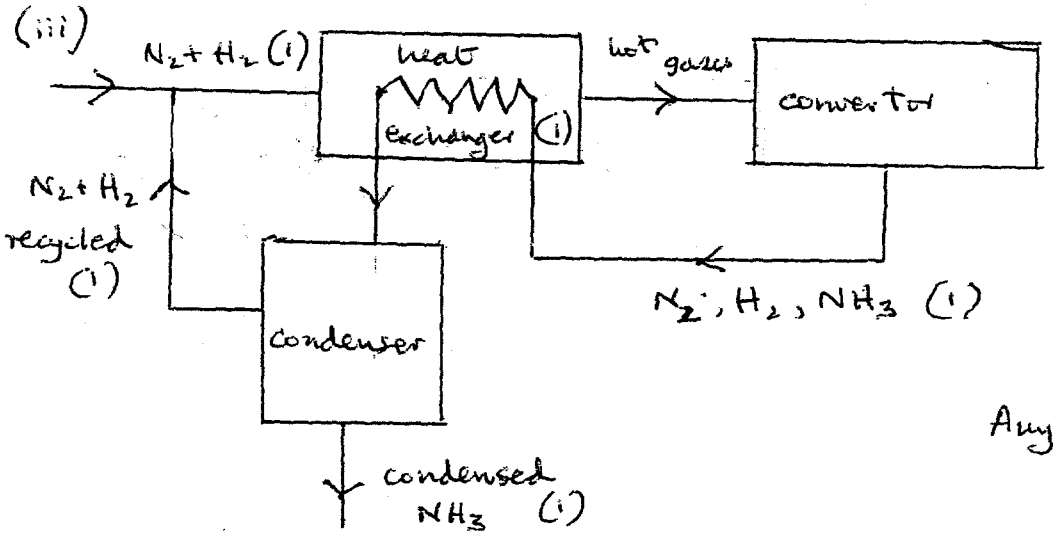 Any 4	4
		[6]
(c)	Reaction 4 → 2 (mols, vols) favoured by high P (1)	
	Collision frequency greater at high P (1)	[2]
(d)	$NH_3 + 2O_2 \longrightarrow HNO_3 + H_2O$	[1]
(e)	$H_2O + CO(NH_2)_2 \longrightarrow 2NH_3 + CO_2$ $-287 + (-320.5) \longrightarrow -162 \quad -414.5$ (1) $-607.5 \longrightarrow -576.5$ $\Delta H = 31\ kJ\ mol^{-1}$ (1)	[2]
	[Total: 12]	

Question Number	Mark Scheme Details			Part Mark
5	$H^+/Cr_2O_7^{2-}$	A, B, C		
	H^+/MnO_4^-	C, E		
	H_2/Pt	E		
	Cu^{2+} (Fehling)	C		
	2,4-DNP	C, D	1 each	9 max
	Br_2	E		
	Each wtng answer in a box invalidates a correct answer			

Question Number	Mark Scheme Details	Part Mark
6 (a)	$C_2H_5CH(CH_3)CH_2OH$ etc (1)	[1]
(b)(i)	$C_5H_{11}OH + HBr \longrightarrow C_5H_{11}Br + H_2O$ (1)	
(ii)	88 g alcohol required for 151 g bromide (1)	
	$\therefore \frac{88}{151} \times \frac{100}{60} \times 15$ g required for 15 g bromide (60% yield)	[3]
	$= 14.57$ g allow 14.5 to 14.6 g (1)	
(c)	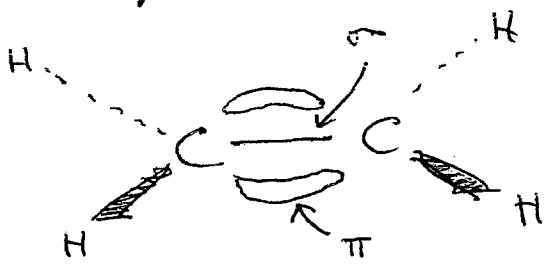 a neat drawing of a double bond (1) σ and π labels (1)	[2]
(d) (i)	$C_5H_{11}OH \xrightarrow[\text{reflux (1)}]{H^+/Cr_2O_7^{2-}\text{ (1)}} C_4H_9CO_2H$	
	accept H^+/MnO_4^- or OH^-/MnO_4^-	
(ii)	$CH_3CO_2H + HOC_5H_{11} \longrightarrow CH_3CO.OC_5H_{11} [+ H_2O]$ (1)	[4]
	conc H_2SO_4 + heat/reflux (1)	
	condition mark is only awarded when the reagent is correct	[Total: 10]